ANATECH ELECTRONICS, INC.

Manufacturer of RF & Microwave Filters and Products

ISO 9001 : 2000
REGISTERED FIRM

200 MHz Crystal Bandpass Filter

Part Number: AM200CR211

Center Frequency (Fo)	200 MHz
3 dB Band Width:	±10 KHz Min
Insertion Loss:	7.0 dB Max
Pass Band Return Loss:	8 dB Min ±10 KHz
Pass Band Ripple:	0.5 dB Max
20 dBc Band Width:	±50 KHz Max
30 dBc Band Width:	±200 KHz Max
Ultimate Attenuation:	30 dB Max to 2 GHz
Input Power	-5 dBm Max
Impedance:	50 Ohms
Operating Temperature:	Room or Advise
Workmanship:	IPC-610 Class 2
RoHS COMPLIANT	NO

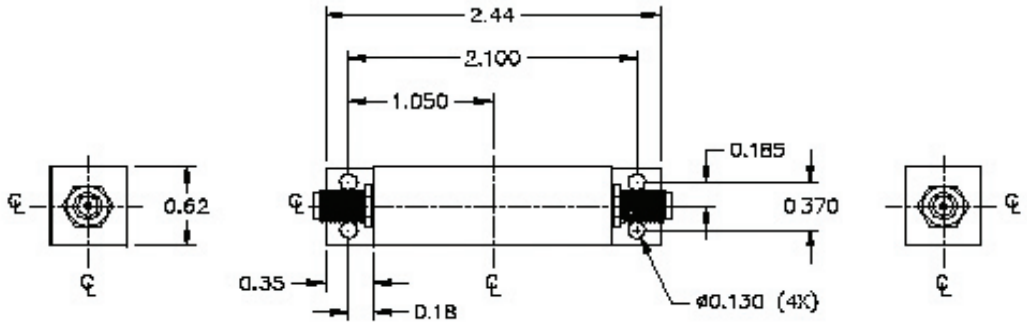

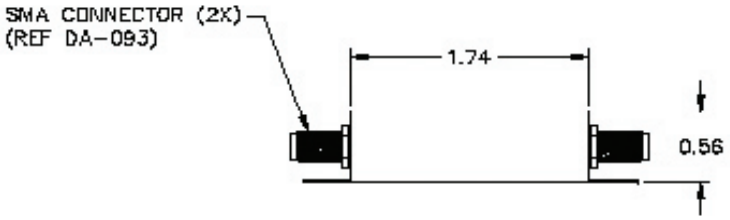

CAN: FA-512
COVER: FB-500

ANATECH ELECTRONICS INC. 70 Outwater Lane, Garfield, NJ 07026 Tel: (973) 772-4242 Fax: (973) 772-4646
E-Mail: sales@anatechelectronics.com Website: www.anatechelectronics.com