This drawing and all informations contained here can not be used or reproduced, integrally or partially, without written authorization by Colombo Sergio & Figli.

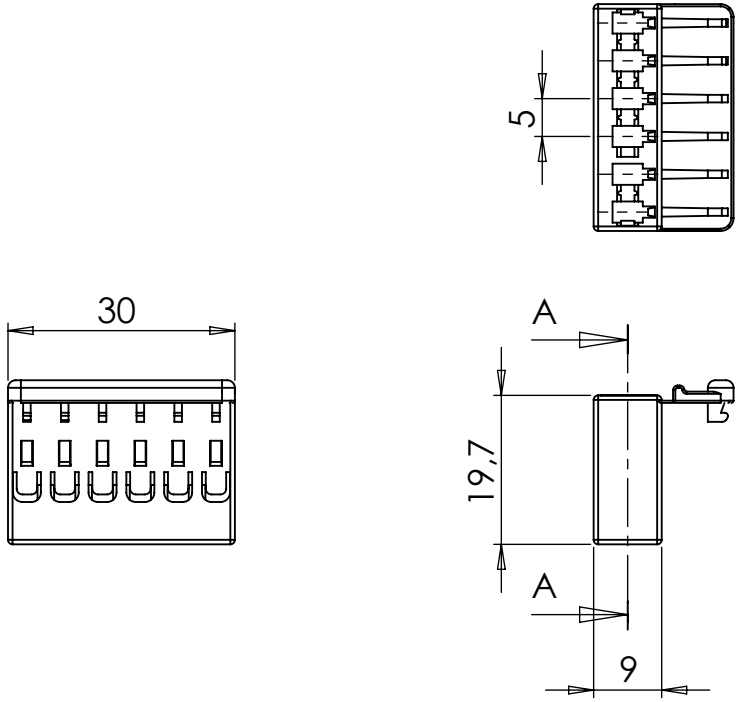

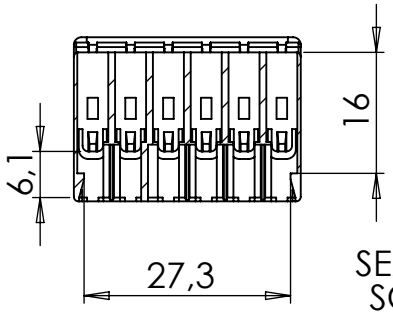

SEZIONE A-A
SCALA 1 : 1

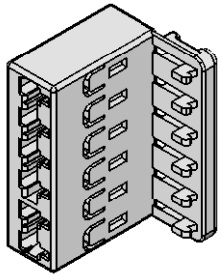

INDEX	MODIFICATION	DATE

COLOMBO SERGIO e Figli S.r.l.
20063 CERNUSCO S/N - VIA COMO, 11
TEL +39.02.9210.7404 - FAX +39.02.9210.0217
http://www.cscolombo.com - e-mail: info@cscolombo.com

DIMENSIONS WITHOUT TOLERANCES		
∢ ±2°	0 - 6	±0.1
	6 - 30	±0.2
	> 30	±0.3

PART NUMBER	MATERIAL
CS-P506DSB/PAV2	PA66 UL94 V-2
CS-P506DSB/PAV0	PA6/66 UL94 V-0
CS-P506DSB/PAV2NF	PA6 UL94 V-2 GWIT 775
CS-P506DSB/PPV2NF	PP UL94 V-2 GWIT 775

SCALE	CAD REFER	SIZE	INDEX 0
1:1	Y:\dis\cs\p5\dsb\tavole\	A4	09/03/2005

BASE CODE	DESCRIPTION
CS-P506DSB	6 POLES CONNECTOR FOR PCB