THIS DRAWING IS UNPUBLISHED. RELEASED FOR PUBLICATION -,- .
© COPYRIGHT - By - ALL RIGHTS RESERVED.

REVISIONS

P	LTR	DESCRIPTION	DATE	DWN	APVD
	B	REVISED PER ECO-20-000152	11JAN2020	SM	MZ

1 THIS PART WILL ACCEPT FOUR (4) MULTIMATE PIN CONTACTS

2 HOUSING AND PRESSURE PLATE: NYLON, BLACK.
PERIPHERAL SEAL: ELASTOMER, BLACK.
WIRE ENTRY SEAL: ELASTOMER, RED-IRON OXIDE.

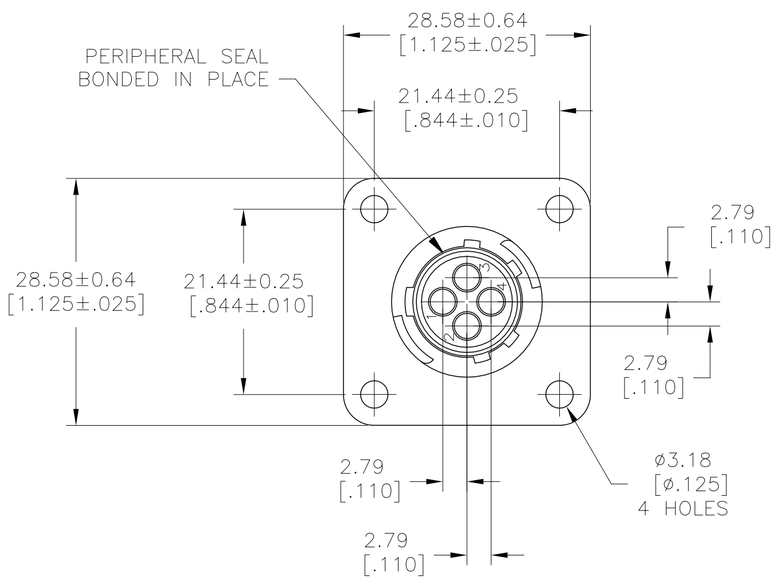

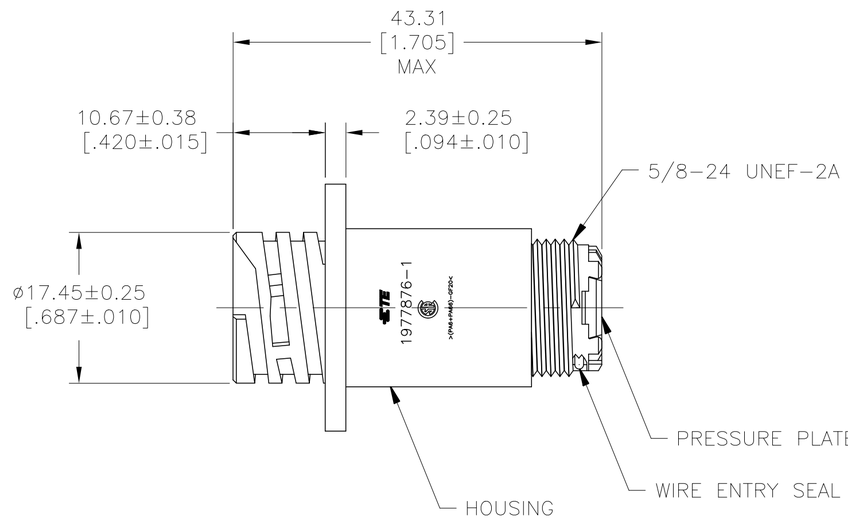

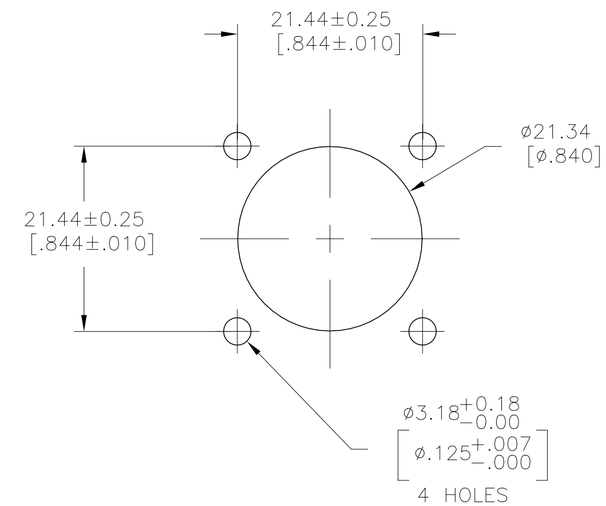

RECOMMENDED PANEL CUTOUT

1977876

1977876-1
PART NUMBER

THIS DRAWING IS A CONTROLLED DOCUMENT.

DIMENSIONS: mm [INCHES]

TOLERANCES UNLESS OTHERWISE SPECIFIED:
0 PLC ± -
1 PLC ± -
2 PLC ± 0.13 [.005]
3 PLC ± -
4 PLC ± -
ANGLES ± -

MATERIAL -
FINISH -

DWN KIRAN HOLAL 08NOV12
CHK M ZITTO 08NOV12
APVD M ZITTO 08NOV12
PRODUCT SPEC —
APPLICATION SPEC —
WEIGHT —

TE Connectivity

NAME
CPC SQUARE FLANGE
RECEPTACLE ASSEMBLY, SERIES 1,
SEALED,11-4, STANDARD SEX, UV RESISTANT

SIZE	CAGE CODE	DRAWING NO	RESTRICTED TO
A2	00779	C-1977876	—

CUSTOMER DRAWING | SCALE 2:1 | SHEET 1 OF 1 | REV B