THIS DRAWING IS UNPUBLISHED. RELEASED FOR PUBLICATION 20
© COPYRIGHT 20 BY TYCO ELECTRONICS CORPORATION. ALL RIGHTS RESERVED.

LOC	DIST
AP	-

REVISIONS

P	LTR	DESCRIPTION	DATE	DWN	APVD
	C1	REDRAW BY CAD EC-001/04	16APR2004	MRB	PLF

CAD Pro-E
DO NOT REVISE EXCEPT BY CAD

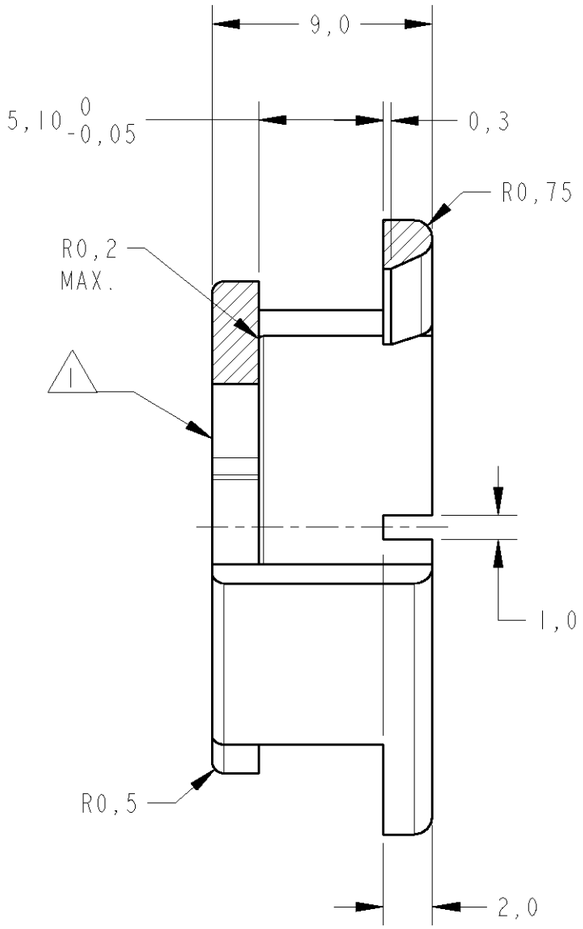

SECTION A-A

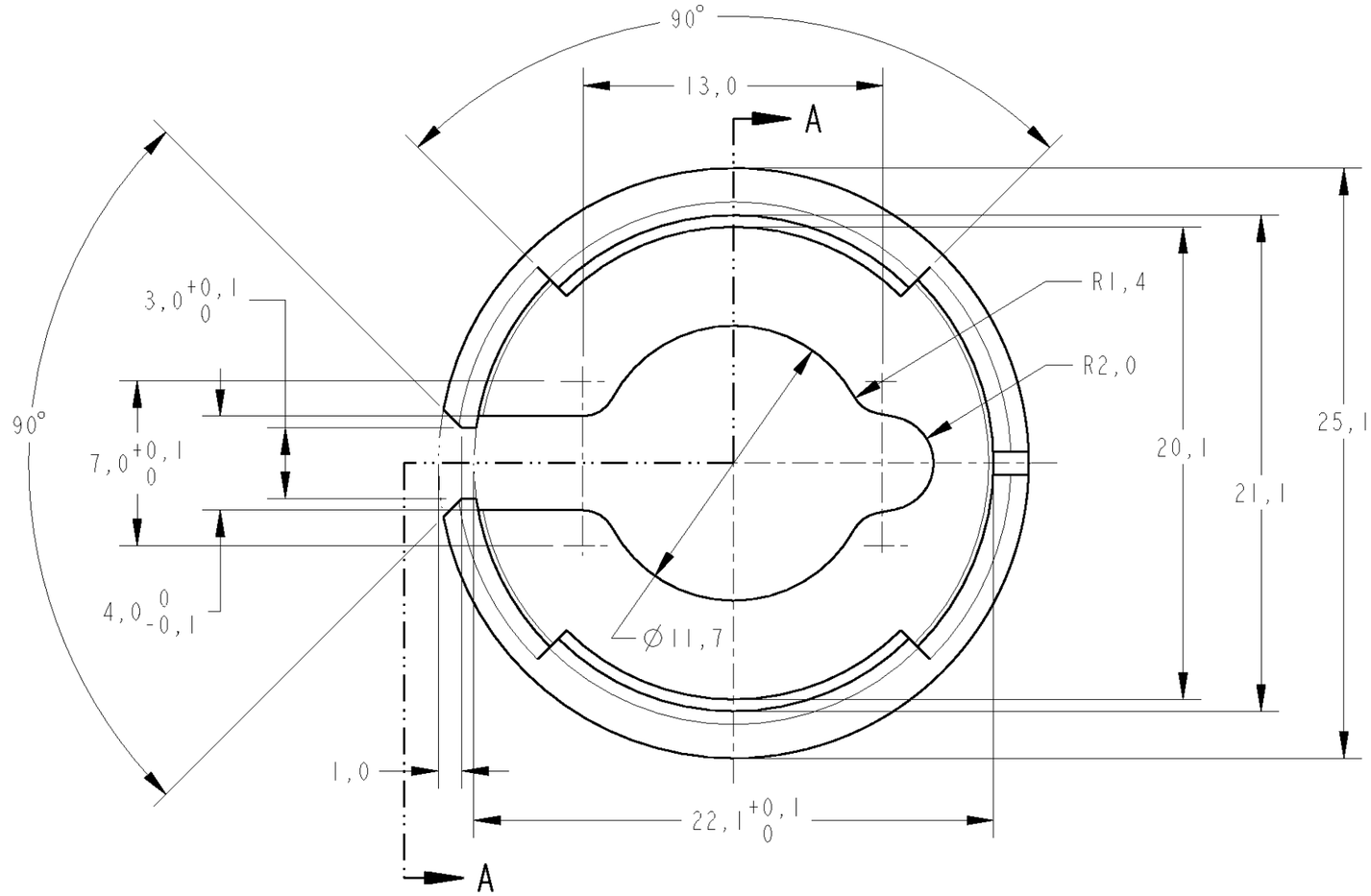

1 -NOTAS:

GRAVAÇÃO MARKING
LOGOTIPO AMP 105-40 AMP LOGO
PAÍS PRODUTOR 105-40 MANUFACTURER COUNTRY
LOGOTIPO CLIENTE VW105-14 CUSTOMER LOGO
NÚMERO PEÇA CLIENTE DIN-1451 CUSTOMER PART NUMBER

PART NUMBER VW	FINISH	MATERIAL	PART NUMBER
307972616 1	VIOLETA VIOLET	PA 6.6 +25% FV (GF)	881301-1

THIS DRAWING IS A CONTROLLED DOCUMENT FOR TYCO ELECTRONICS CORPORATION. IT IS SUBJECT TO CHANGE AND THE CONTROLLING ENGINEERING ORGANIZATION SHOULD BE CONTACTED FOR THE LATEST REVISION.

DIMENSIONS: mm

TOLERANCES UNLESS OTHERWISE SPECIFIED:
0 PLC ±-
1 PLC ±0,1
2 PLC ±-
3 PLC ±-
4 PLC ±-
ANGLES ±1

MATERIAL SEE TABLE
FINISH SEE TABLE

DWN M.R.BRIZ 16APR2004
CHK P.L.FARIA 20APR2004
APVD H.LIVERARO 20APR2004
PRODUCT SPEC NA
APPLICATION SPEC NA
WEIGHT —/—

tyco Electronics
TYCO ELECTRONICS do Brasil LTDA.
Sao Paulo, Brasil

NAME
SECONDARY LOCKING COVER FOR 4 POSN. SEALING
-

SIZE	CAGE CODE	DRAWING NO	RESTRICTED TO
A3	00779	C-881301	-

CUSTOMER DRAWING | SCALE 4:1 | SHEET 1 OF 1 | REV C1

AMP 1470-19 REV 31MAR2000

Pro/ENGINEER DRAWING