SHEET OF

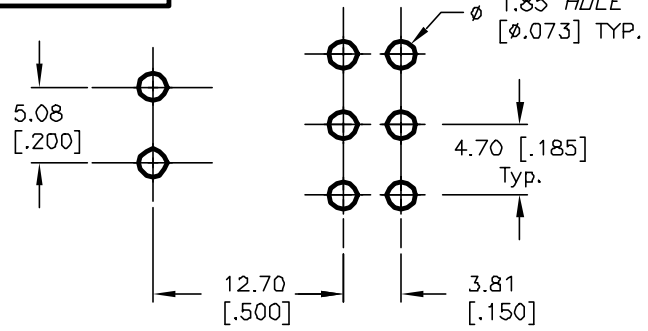

RECOMMENDED P.C.B. LAYOUT

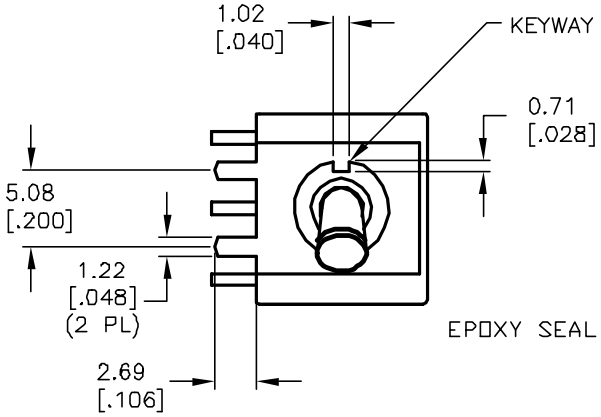

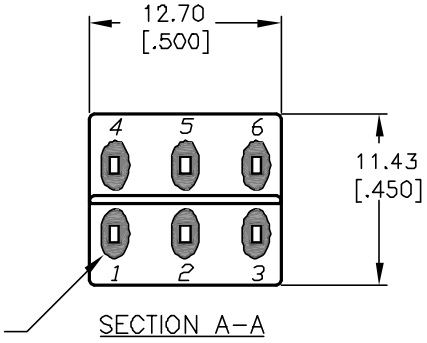

SECTION A-A
CROPPED FOR CLARITY

SWITCH FUNCTION		
POS. 1	POS. 2	POS. 3
ON	ON	ON
2-3,5-6	2-3,5-4	2-1,5-4

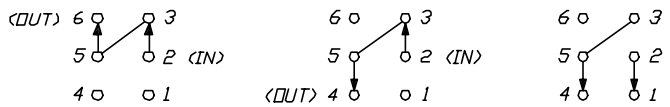

POS. 1 POS. 2 POS. 3

CIRCUIT: DPDT 3-WAY

NOTE: JUMPER PIN 3 TO PIN 5

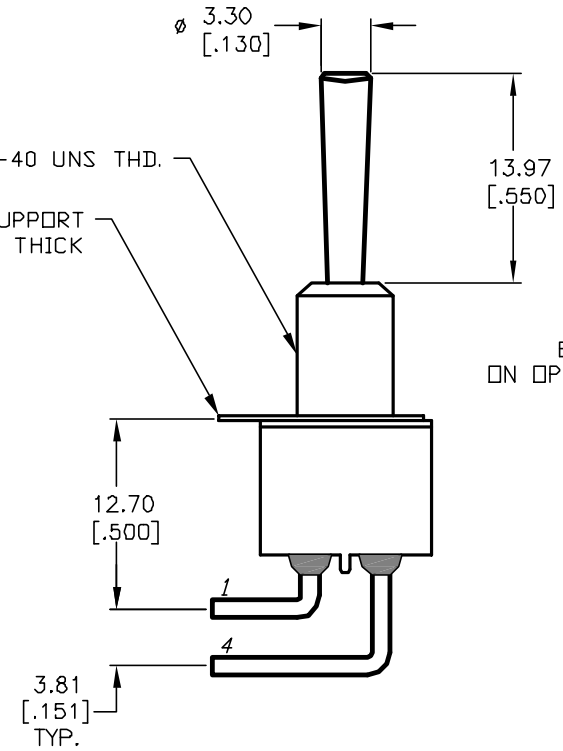

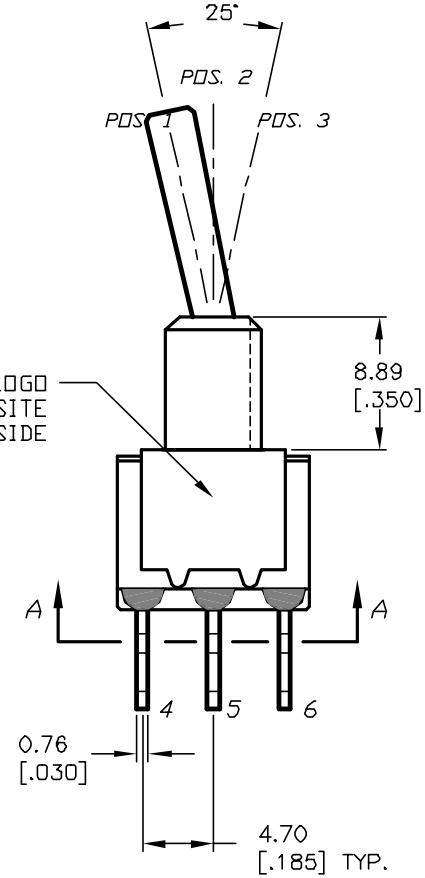

NOTES:

1. ALL DIMENSIONS IN MM [INCH]
2. GENERAL TOLERANCE: X.X=±0.4
   X.XX=±0.25
3. TERM. NOS. FOR REF. ONLY
4. RATING: 0.4VA @20V (AC or DC)
5. ▲ FIXED TERM. & MOVING CONTACT:
   Copper Alloy W/Gold plate over
   Nickel plate.
6. ELECTRICAL LIFE: 50,000 make-and-break cycles
   at full load.
7. INSULATION RESISTANCE: 1,000M ohm min.
8. DIELECTRIC STRENGTH: 1,000V RMS @sea level.
9. OPERATING TEMP.: -30°C to +85°C.

REV.	ECN No.	DESCRIPTION	DATE	CHKD
A	12850	RELEASED	2/27/03	CJB

THE INFORMATION CONTAINED IN THIS DOCUMENT
IS PROPRIETARY TO E-SWITCH AND IS
NOT TO BE COPIED OR TRANSFERRED

E-SWITCH®

TITLE: 100 DP-6 T3 B2 M6 R E (GOLD CONTACTS)

SCALE	DATE	DR	DWG	REV
2:1	2/27/03	CJB	T126062	A