Materials
1. Brass, nickel plating, 1μ minimum
2. Nylon PA46, black

Electrical requirements
Dielectric strength: 1 min @ 250 Vac
Insulation resistance: 100 MΩ @ 500 Vdc
Contact resistance: 50 mΩ or less

Mechanical requirements
Insertion force: 0.3 ~ 4 kgf
Withdrawl force: 0.3 ~ 4 kgf
Durability: 5000 mating cycles while maintaining insertion force of 0.3 ~ 4 kg; withdrawl force of 0.3 ~ 4 kgf; contact resistance of 50mΩ or less.

Environmental tests
Damp test: 40 °C, RH 90-100% for 96 hrs. Cool to ambient and recover for 2 hours. Maintain dielectric strength of 500 Vac for 1 min, insulation resistance of 50 MΩ @ 500 Vdc minimum.

Dry test: 70 °C, RH 70-85% for 96 hrs. Cool to ambient and recover for 2 hours. Maintain contact resistance of 100 mΩ or less with no looseness or deformation.

Salt spray test: 35 ±2 °C, RH 90-95%, 5% NaCl mist for 24 hrs. Wash parts after test. Maintain mechanical requirements and a contact resistance of less than 100 mΩ.

Operating range
-25 to 70 °C

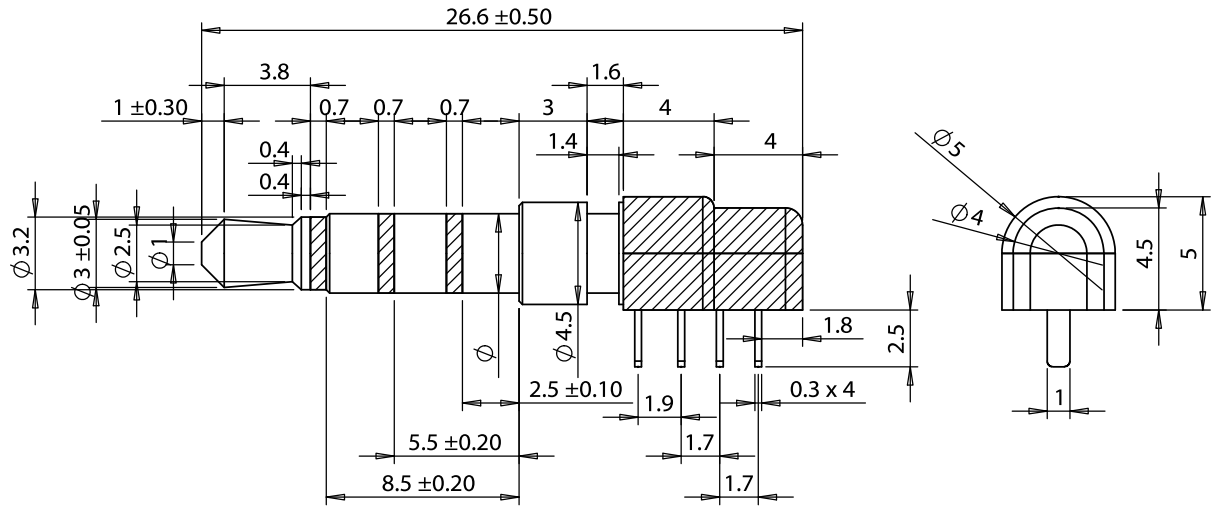

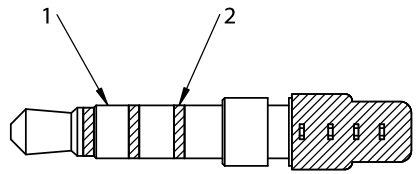

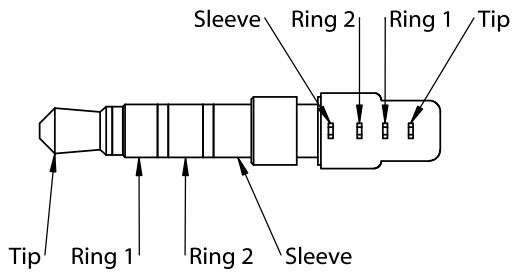

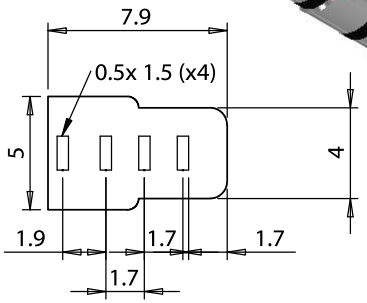

PCB Layout

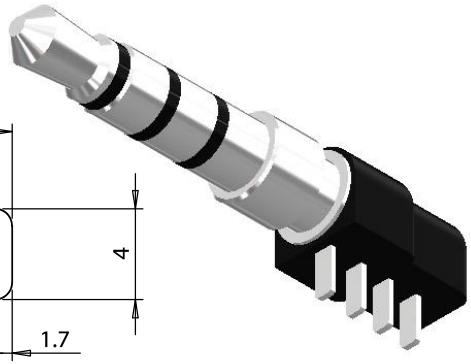

REVISION	DATE	DESCRIPTION
A	7/9/2015	Initial release
A1	10/27/2015	Added PCB dimensioning and wiring information

PREPARED: GL 2015.10.27 14:35:46 -07'00'

VERIFIED: JM 2015.10.27 14:37:46 -07'00'

DIMENSIONS ARE IN MILLIMETERS

TOLERANCES:
X: ± 0.5 mm
X.X: ± 0.3 mm
X.XX: ± 0.05 mm

NOTES
RoHS compliant

Drawing in third angle projected

DESCRIPTION:
Connector, 4C audio plug, 3.5xL26.6 mm, brass, nickel plated, PCB mount

TENSILITY
20802 Sockeye Place #130
Bend, OR 97701 USA
tel 541.323.3228 *fax* 541.323.4202
800 877.670.7118 www.tensility.com

SIZE	PART NUMBER
A	54-00035

SCALE: 1:1 | SHEET 1 OF 1

5 4 3 2 1