SNG-19B-080

Aliases (UALSNG19B08000)

KEMET, SNG, AC Line Filters, Ground Wire, 0.08 mH, -30/+50%

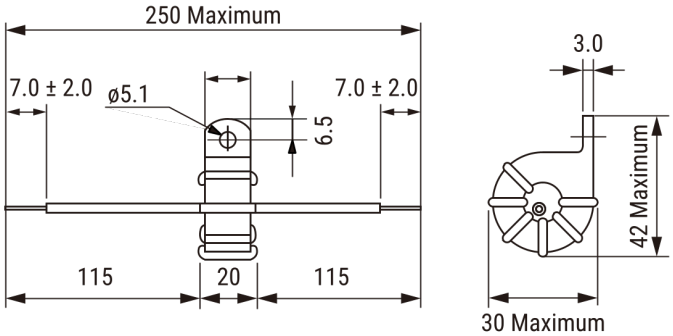

Click here for the 3D model.

General Information	
Series	SNG
Style	Through-Hole
RoHS	Yes
Qualifications	TUV
Core	Mn-Zn Ferrite or Ni-Zn Ferrite

Specifications	
Voltage AC	250 VAC
Voltage DC	250 VDC
Inductance	80 uH (160 kHz)
Inductance Tolerance	-30/+50%
Temperature Range	-25/+105°C
DC Resistance	10 mOhms

Dimensions	
D	30mm MAX
L	20mm NOM
H	42mm MAX
LL	115mm NOM
L2	250mm MAX
Wire Size	UL1015 AWG16

Packaging Specifications	
Packaging	Bulk
Packaging Quantity	250
Component Weight	19 g

Statements of suitability for certain applications are based on our knowledge of typical operating conditions for such applications, but are not intended to constitute - and we specifically disclaim - any warranty concerning suitability for a specific customer application or use. This Information is intended for use only by customers who have the requisite experience and capability to determine the correct products for their application. Any technical advice inferred from this Information or otherwise provided by us with reference to the use of our products is given gratis, and we assume no obligation or liability for the advice given or results obtained.

© 2006 - 2023 KEMET