© 2020 TE Connectivity. All Rights Reserved.

REVISIONS					
P	LTR	DESCRIPTION	DATE	DWN	APVD
	D1	REVISED ECR-19-019743	02JUN2020	J.J	W.H

1. MATERIAL: BASE - POLYESTER MOLDING COMPOUND, BLACK.
   WIRE STUFFER: - POLYESTER MOLDING COMPOUND, BLACK.
   TERMINAL - COPPER ALLOY, PLATED WITH 3.81µm MINIMUM THICK TIN OVER 1.27µm MINIMUM THICK NICKEL UNDERPLATE.

2. EACH WIRE ENTRY HOLE ACCEPTS ONE UNSTRIPPED SOLID COPPER 22-26 AWG WIRE WITH WIRE INSULATION DIAMETER RANGE FROM .060 THROUGH .040. OTHER WIRE SIZES AND TYPES SHALL BE SUBMITTED TO AMP ENGINEERS FOR APPLICATION APPROVAL.

3. SOLDER TABS PROVIDED FOR PERMANENT BOARD MOUNTING.

4. LOCATION OF HOLE PATTERN DETERMINED BASED ON CUSTOMER REQUIREMENTS.

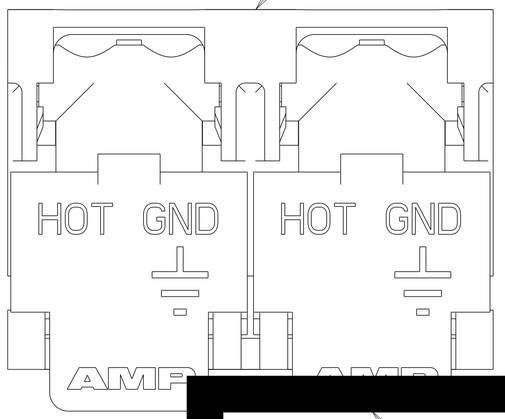

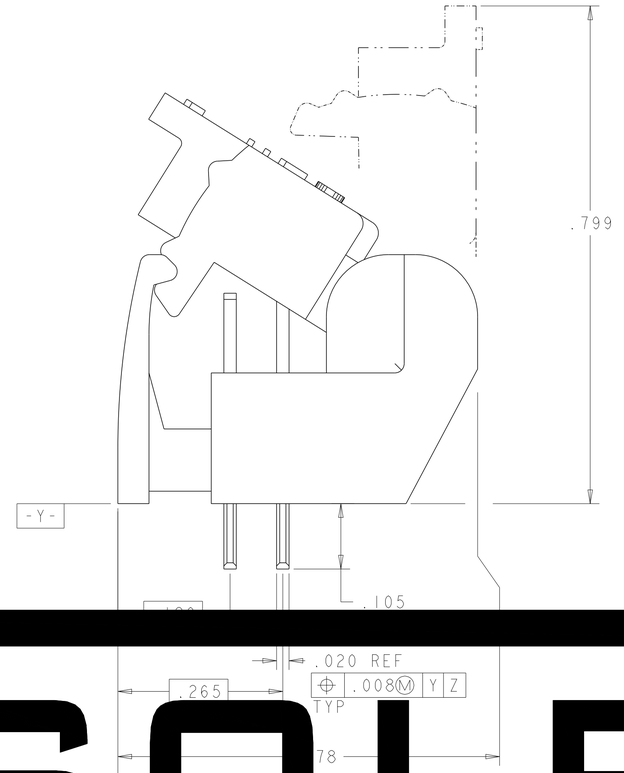

SUGGESTED PRINTED CIRCUIT BOARD MOUNTING DIMENSIONS VIEWED FROM SOLDER SIDE

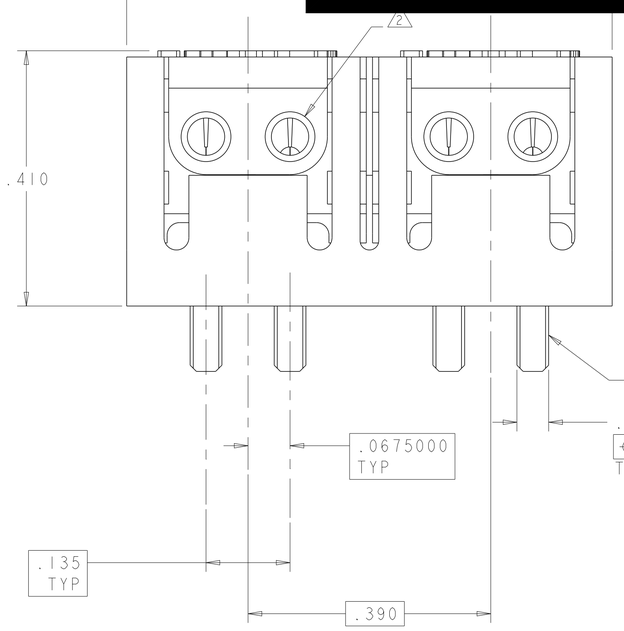

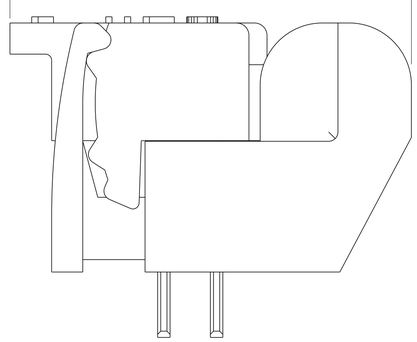

CLOSED POSITION

[OBSOLETE]

1339313-1

PART NUMBER

THIS DRAWING IS A CONTROLLED DOCUMENT.

DIMENSIONS: INCHES

TOLERANCES UNLESS OTHERWISE SPECIFIED:
0 PLC ±-
1 PLC ±-
2 PLC ±.01
3 PLC ±.005
4 PLC ±-
ANGLES ±2°

MATERIAL 1

FINISH - -

DWN	K.ZARBOCK	28APR00
CHK	M.DERSTINE	28APR00
APVD	M.DERSTINE	28APR00
PRODUCT SPEC	-	
APPLICATION SPEC	-	
WEIGHT	-	

TE Connectivity

NAME: ASSEMBLY, DOUBLE PAIR, DOUBLE ENTRY, PIVOT II CONNECTOR

SIZE	CAGE CODE	DRAWING NO	RESTRICTED TO
A1	00779	C-1339313	

CUSTOMER DRAWING | SCALE 8:1 | SHEET 1 OF 1 | REV D1

4805 (3/13)